Signals and Systems Lecture-17: z-Transform 2

Chadi Abou-Rjeily

Department of Electrical and Computer Engineering
Lebanese American University
chadi.abourjeily@lau.edu.lb

April 5, 2023

Introduction

Consider a LTI discrete-time (DT) system whose input is $x[n]$ and output $y[n]$. This system is totally determined by its:

- Impulse response $h[n]$ such that:

$$y[n] = h[n] * x[n]$$

- Transfer function $H(z)$ such that:

$$Y(z) = H(z)X(z)$$

- The impulse response and transfer function are related to each other by:

$$H(z) = \mathcal{Z}\left(h[n]\right)$$

- For $x[n] = \delta[n]$:
  - $y[n] = h[n] * \delta[n] = \sum_{k=0}^{n} h[k]\delta[n-k] = h[n]$.
  - $X(z) = 1$ and $Y(z) = H(z)X(z) = H(z)$.

System Interconnections

- Cascade:

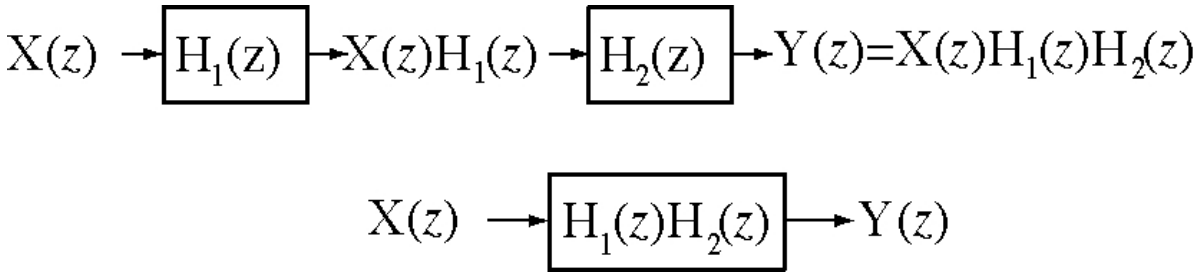

- Parallel:

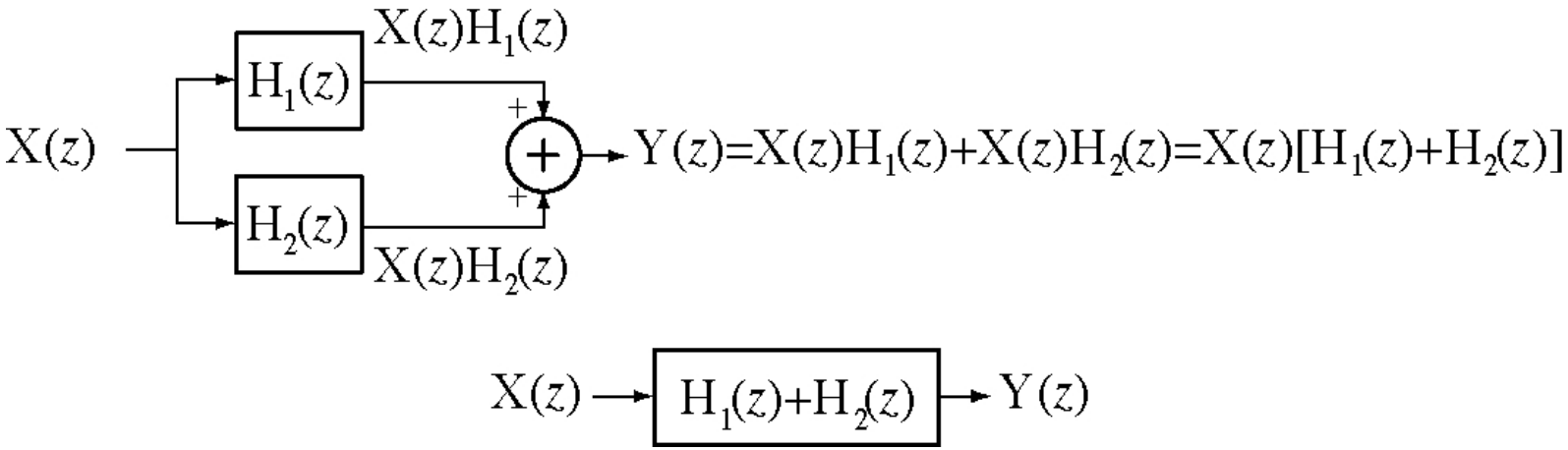

LTI DT Systems and Difference Equations

- Consider a LTI DT system whose input is $x[n]$ and output $y[n]$. Its transfer function can be written as:

$$H(z) = \frac{Y(z)}{X(z)} = \frac{b_0 + b_1 z^{-1} + b_2 z^{-2} + \cdots + b_{m_1} z^{-m_1}}{a_0 + a_1 z^{-1} + a_2 z^{-2} + \cdots + a_{m_2} z^{-m_2}}$$

- The above equation can be written as:

$$a_0 Y(z) + a_1 z^{-1} Y(z) + a_2 z^{-2} Y(z) + \cdots + a_{m_2} z^{-m_2} Y(z) =$$
$$b_0 X(z) + b_1 z^{-1} X(z) + b_2 z^{-2} X(z) + \cdots + b_{m_1} z^{-m_1} X(z)$$

- Since $\mathcal{Z}(x[n-k]) = z^{-k}\mathcal{Z}(x[n])$, the above equation implies that:

$$a_0 y[n] + a_1 y[n-1] + a_2 y[n-2] + \cdots + a_{m_2} y[n-m_2] =$$
$$b_0 x[n] + b_1 x[n-1] + b_2 x[n-2] + \cdots + b_{m_1} x[n-m_1]$$

Block Diagrams (1)

- Digital LTI systems can be implemented using Delay Blocks, Multipliers and Adders.
- The transfer function of a delay block of order k is z^{-k}:

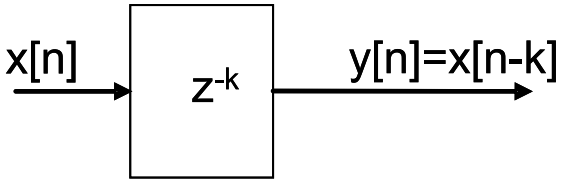

- Example: Give the block diagram of the DT system whose transfer function is given by:

$$H(z) = \frac{2z - 1}{z + \frac{1}{2}}$$

  - $H(z)$ can be written as:

$$H(z) = \frac{Y(z)}{X(z)} = \frac{2z - 1}{z + \frac{1}{2}} = \frac{2 - z^{-1}}{1 + \frac{1}{2}z^{-1}}$$

$$\Rightarrow Y(z) + \frac{1}{2}z^{-1}Y(z) = 2X(z) - z^{-1}X(z)$$

Block Diagrams (2)

- The last equation implies that:

$$y[n] + \frac{1}{2}y[n-1] = 2x[n] - x[n-1]$$
$$\Rightarrow \; y[n] = -\frac{1}{2}y[n-1] + 2x[n] - x[n-1]$$

- The Block diagram of the system is given by:

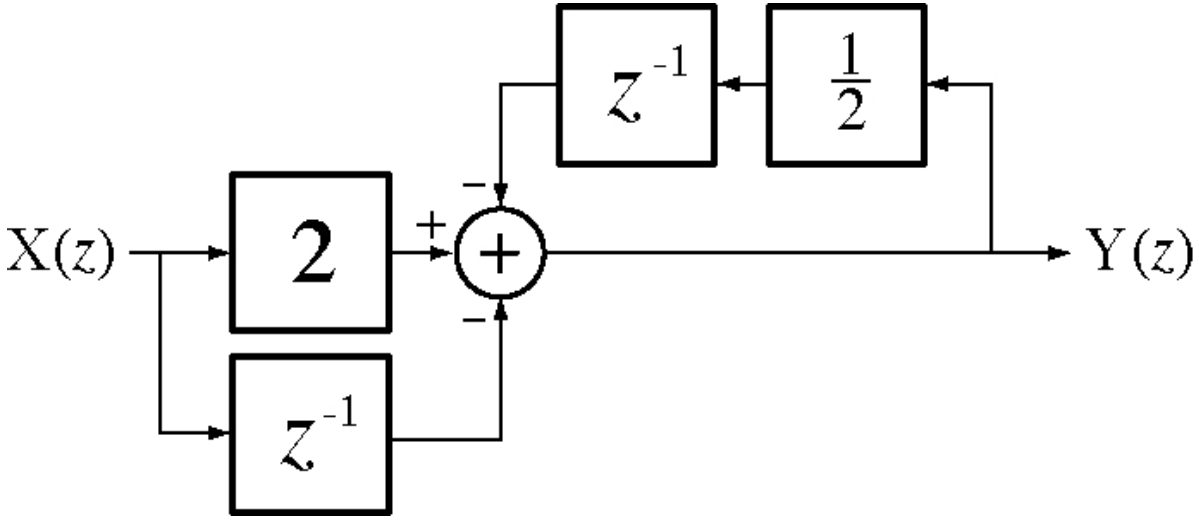

Block Diagrams (3)

Determine the transfer function of the system given by:

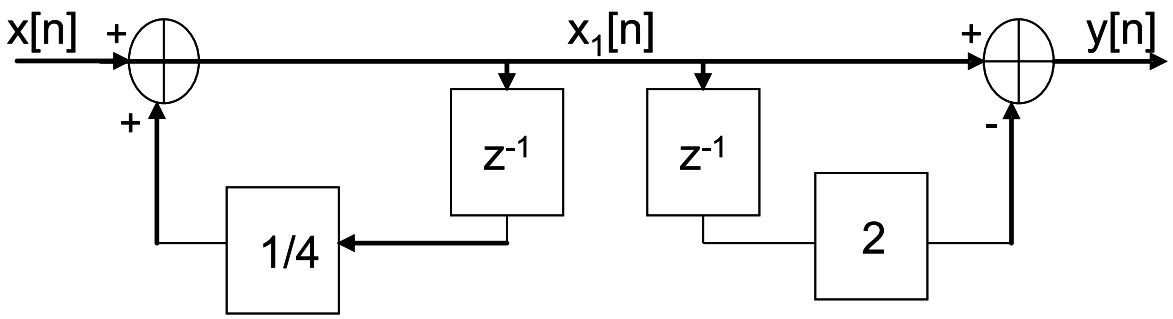

- The above system is the concatenation of 2 systems:
  - $x[n] \rightarrow x_1[n]$ having a transfer function $H_1(z)$:

$$X_1(z) = X(z) + \frac{1}{4}z^{-1}X_1(z) \;\Rightarrow\; H_1(z) = \frac{X_1(z)}{X(z)} = \frac{1}{1-\frac{1}{4}z^{-1}}$$

  - $x_1[n] \rightarrow y[n]$ having a transfer function $H_2(z)$:

$$Y(z) = X_1(z) - 2z^{-1}X_1(z) \;\Rightarrow\; H_2(z) = \frac{Y(z)}{X_1(z)} = 1 - 2z^{-1}$$

  - The overall transfer function is given by:

$$H(z) = H_1(z)H_2(z) = \frac{1-2z^{-1}}{1-\frac{1}{4}z^{-1}} = \frac{z-2}{z-\frac{1}{4}}$$

Block Diagrams (4)

Example: Give the block diagram of the DT system whose transfer function is given by:

$$H(z) = \frac{z - \frac{1}{2}}{z^2 - z + \frac{2}{9}}$$

- $H(z)$ can be written as:

$$H(z) = \frac{Y(z)}{X(z)} = \frac{z^{-1} - \frac{1}{2}z^{-2}}{1 - z^{-1} + \frac{2}{9}z^{-2}}$$

$$\Rightarrow \; Y(z) - z^{-1}Y(z) + \frac{2}{9}z^{-2}Y(z) = z^{-1}X(z) - \frac{1}{2}z^{-2}X(z)$$

$$\Rightarrow \; y[n] - y[n-1] + \frac{2}{9}y[n-2] = x[n-1] - \frac{1}{2}x[n-2]$$

$$\Rightarrow \; y[n] = y[n-1] - \frac{2}{9}y[n-2] + x[n-1] - \frac{1}{2}x[n-2]$$

Block Diagrams (5)

- A possible realization of the block diagram is shown below:

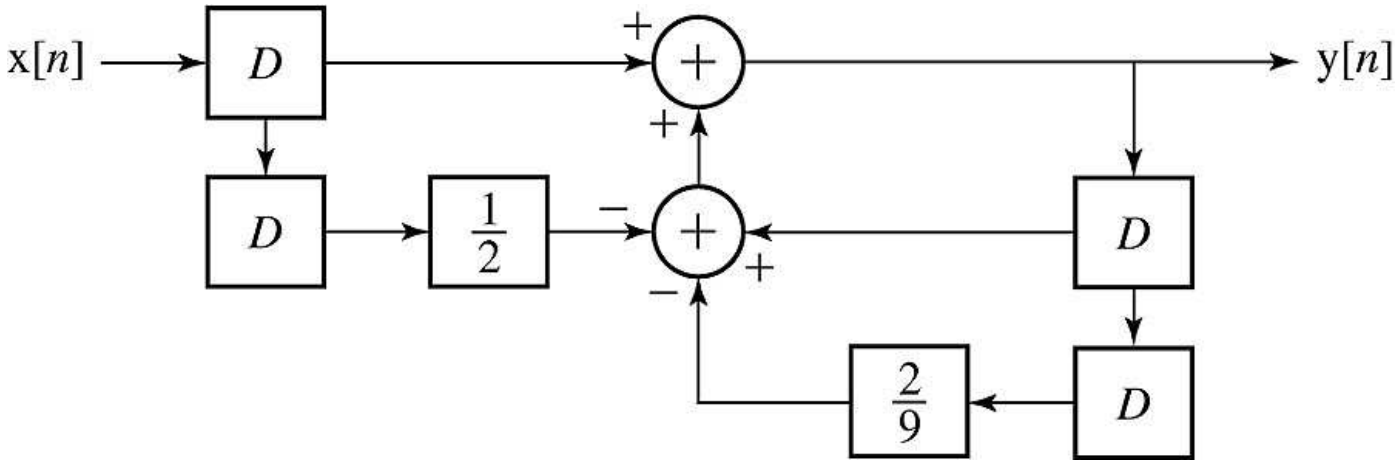

Causality (1)

Causality: A LTI DT system whose transfer function can be written as $H(z) = \frac{N(z)}{D(z)}$ is causal if:

$$\text{degree}[N(z)] \leq \text{degree}[D(z)]$$

Example: For $H(z) = \frac{z-\frac{1}{2}}{z^2-z+\frac{2}{9}}$:

- $\text{degree}[N(z)] = 1 \leq \text{degree}[D(z)] = 2$ and the system is causal.
- From the previous example, the difference equation of the above system is given by:
  $y[n] = y[n-1] - \frac{2}{9}y[n-2] + x[n-1] - \frac{1}{2}x[n-2]$.
  - The current output depends on the past outputs and past inputs.
  - There is no dependence on future inputs and the system is causal.

Causality (2)

Example: For $H(z) = \frac{z^2}{z+1}$:

- $\text{degree}[N(z)] = 2 > \text{degree}[D(z)] = 1$ and the system is not causal.
- The difference equation can be determined from:

$$H(z) = \frac{1}{z^{-1} + z^{-2}} = \frac{Y(z)}{X(z)}$$
$$\Rightarrow \; z^{-1}Y(z) + z^{-2}Y(z) = X(z)$$
$$\Rightarrow \; y[n-1] + y[n-2] = x[n]$$

  - The output $y[n-1]$ depends on the past output $y[n-2]$ and future input $x[n]$ (n is the future w.r.t. $n-1$).
  - There is dependence on future inputs and the system is not causal.

Stability (1)

Stability: A LTI DT system is stable if:

- Its impulse response verifies:

$$\sum_{n=0}^{+\infty} |h[n]| < \infty$$

  In other words, the above summation is finite.

- All the poles of $H(z)$ (the transfer function) lie inside the unit circle $|z| = 1$.

Note that the above definitions are equivalent. In other words, to verify that a system is stable, it is sufficient to prove that this system verifies one of the above relations.

Stability (2)

- Note the equivalence between the stability of CT systems and DT systems:
  - A CT system is stable if all the poles of the transfer function $H(s)$ lie in the open LHP.
  - A DT system is stable if all the poles of the transfer function $H(z)$ lie inside the unit circle.
  - The above equivalence follows form the fact that the left half s-plane is mapped inside the unit circle in the z-plane following from $z = e^{sT_s}$.
- Note also that the system is not stable if a pole lies on the unit circle.
  - For example: $H(z) = \frac{1}{z-1}$ is unstable.
  - $H(z) = \frac{z}{(z-\frac{1}{2})(z+3)}$ is unstable since the poles are: $p_1 = \frac{1}{2}$ and $p_2 = -3$ with $|p_2| \geq 1$.
  - $H(z) = \frac{z}{z^2+1}$ is unstable since the poles $p_1 = j$ and $p_2 = -j$ lie on the unit circle: $|p_1| = |p_2| = 1$.

Stability (3)

Feedback Systems:

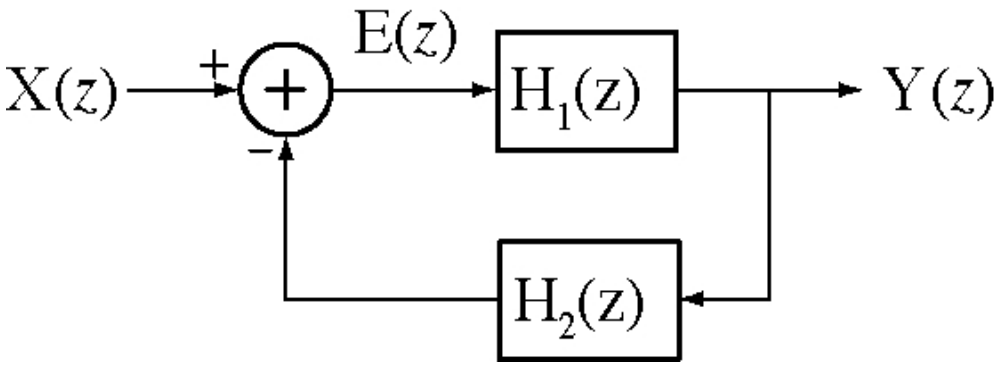

$$
\begin{aligned}
Y(z) &= H_1(z)E(z) \\
&= H_1(z)\left[X(z) - H_2(z)Y(z)\right] \\
&= H_1(z)X(z) - H_1(z)H_2(z)Y(z)
\end{aligned}
$$

- Consequently, the transfer function is given by:

$$H(z) = \frac{Y(z)}{X(z)} = \frac{H_1(z)}{1 + H_1(z)H_2(z)}$$

- The feedback system is stable if all roots of the function $1 + H_1(z)H_2(z)$ lie inside the unit circle.

Example-1 (1)

Determine wether the DT LTI system described by the following difference equation is stable:

$$y[n] + \frac{3}{4}y[n-1] + \frac{1}{8}y[n-2] = x[n] + x[n-1]$$

- Calculating the z-transform, we obtain:

$$Y(z) + \frac{3}{4}z^{-1}Y(z) + \frac{1}{8}z^{-2}Y(z) = X(z) + z^{-1}X(z)$$

$$\Rightarrow \quad H(z) = \frac{Y(z)}{X(z)} = \frac{1 + z^{-1}}{1 + \frac{3}{4}z^{-1} + \frac{1}{8}z^{-2}}$$

$$= \frac{z^2 + z}{z^2 + \frac{3}{4}z + \frac{1}{8}} = \frac{z(z+1)}{(z+\frac{1}{2})(z+\frac{1}{4})}$$

- The poles of $H(z)$ are given by: $p_1 = -\frac{1}{2}$ and $p_2 = -\frac{1}{4}$.
  - Since $|p_1| < 1$ and $|p_2| < 1$, then this system is stable.

Example-1 (2)

Second Method:

- We will study the stability in the discrete-time domain:

$$\frac{H(z)}{z} = \frac{z+1}{(z+\frac{1}{2})(z+\frac{1}{4})} = \frac{r_1}{z+\frac{1}{2}} + \frac{r_2}{z+\frac{1}{4}}$$

where:

$$r_1 = \left[\frac{z+1}{z+\frac{1}{4}}\right]_{z=-\frac{1}{2}} = -2 \;\; ; \;\; r_2 = \left[\frac{z+1}{z+\frac{1}{2}}\right]_{z=-\frac{1}{4}} = 3$$

- Consequently:

$$h[n] = \left[-2\left(-\frac{1}{2}\right)^n + 3\left(-\frac{1}{4}\right)^n\right] u[n]$$

Example-1 (3)

- Therefore:

$$
\begin{aligned}
\sum_{n\in\mathbb{N}} |h[n]| &= \sum_{n\in\mathbb{N}} \left| -2\left(-\frac{1}{2}\right)^n + 3\left(-\frac{1}{4}\right)^n \right| \\
&\leq \sum_{n\in\mathbb{N}} \left[\left| -2\left(-\frac{1}{2}\right)^n \right| + \left| 3\left(-\frac{1}{4}\right)^n \right| \right] \\
&= \sum_{n\in\mathbb{N}} \left| -2\left(-\frac{1}{2}\right)^n \right| + \sum_{n\in\mathbb{N}} \left| 3\left(-\frac{1}{4}\right)^n \right| \\
&= 2\sum_{n\in\mathbb{N}} \left(\frac{1}{2}\right)^n + 3\sum_{n\in\mathbb{N}} \left(\frac{1}{4}\right)^n \\
&= 2\frac{1}{1-\frac{1}{2}} + 3\frac{1}{1-\frac{1}{4}} \\
&= 4 + 4 = 8 < \infty
\end{aligned}
$$

This implies that the system is stable.

Steady state response to sinusoids (1)

Consider a real LTI DT system whose transfer function is equal to $H(z)$. The steady state response of this system to a sinusoid $x[n] = \cos(\omega_0 n)u[n]$ is given by:

$$y[n] = \left|H(e^{j\omega_0})\right| \cos\left(\omega_0 n + \arg\left[H(e^{j\omega_0})\right]\right) u[n]$$

Example: Find the steady state response of:

$$H(z) = \frac{z^2}{z^2 - z + 0.16}$$

to $x[n] = 9\sin\left(\frac{\pi}{2}n + \pi\right) u[n]$.

- $H(e^{j\omega})$ is given by:

$$H(e^{j\omega}) = \frac{e^{j2\omega}}{e^{j2\omega} - e^{j\omega} + 0.16}$$

- For $\omega = \omega_0 = \pi/2$:

$$H(e^{j\omega_0}) = \frac{e^{j\pi}}{e^{j\pi} - e^{j\frac{\pi}{2}} + 0.16} = \frac{-1}{-1 - j + 0.16} = \frac{1}{0.84 + j}$$

Steady state response to sinusoids (2)

- Consequently:

$$\left|H(e^{j\omega_0})\right| = 0.766$$
$$\arg\left[H(e^{j\omega_0})\right] = -0.872 \text{ radians}$$

- Therefore, the steady state response is given by:

$$\begin{aligned} y[n] &= 9\left|H(e^{j\omega_0})\right| \sin\left(\frac{\pi}{2}n + \pi + \arg\left[H(e^{j\omega_0})\right]\right) u[n] \\ &= 6.8913 \sin\left(\frac{\pi}{2}n + 2.269\right) u[n] \end{aligned}$$

Properties of $H(e^{j\omega})$

Proposition 1: $H(e^{j\omega})$ is periodic with period 2π.

- *Proof:*

$$H\left(e^{j(\omega+2\pi)}\right) = H(e^{j\omega}e^{j2\pi}) = H(e^{j\omega})$$

Proposition 2: If $H(z)$ is real-valued, then in the interval $[0\ 2\pi]$ $\left|H(e^{j\omega})\right|$ is symmetrical with respect to the straight line $\omega = \pi$ and $\arg\left[H(e^{j\omega})\right]$ is symmetrical with respect to the point $(\pi, 0)$.

- *Proof:* Consider first the interval $[-\pi\ \pi]$:

$$H\left(e^{j(-\omega)}\right) = H\left((e^{j\omega})^*\right) = H(e^{j\omega})^*$$

  - where the last equality follows from $H(z)$ being real.
- Consequently: $\left|H\left(e^{j\omega}\right)\right|$ is even and $\arg\left[H\left(e^{j\omega}\right)\right]$ is odd.
- Therefore, following from the periodicity of $H(e^{j\omega})$:

$$\left|H\left(e^{j(2\pi-\omega)}\right)\right| = \left|H\left(e^{j\omega}\right)\right|$$

$$\arg\left[H\left(e^{j(2\pi-\omega)}\right)\right] = -\arg\left[H\left(e^{j\omega}\right)\right]$$

Example-2 (1)

Determine the frequency response of $H(z) = 1 + z^{-2}$.

- $H(e^{j\omega})$ can be written as:

$$H(e^{j\omega}) = 1 + e^{-j2\omega} = e^{-j\omega}\left(e^{j\omega} + e^{-j\omega}\right)$$
$$= 2\cos\omega e^{-j\omega}$$

- Consequently:

$$\left|H(e^{j\omega})\right| = |2\cos\omega|$$
$$\arg\left[H(e^{j\omega})\right] = \begin{cases} -\omega, & \cos\omega \geq 0; \\ -\omega + \pi, & \cos\omega < 0. \end{cases}$$

- Since $H(e^{j\omega})$ is periodic with a period 2π, we will always plot $H(e^{j\omega})$ in the interval $[0\ 2\pi]$.
  - We only need to plot the part between 0 and π.
  - The part between π and 2π can be deduced by symmetry.

Example-2 (2)

- The amplitude and the phase responses have the following forms:

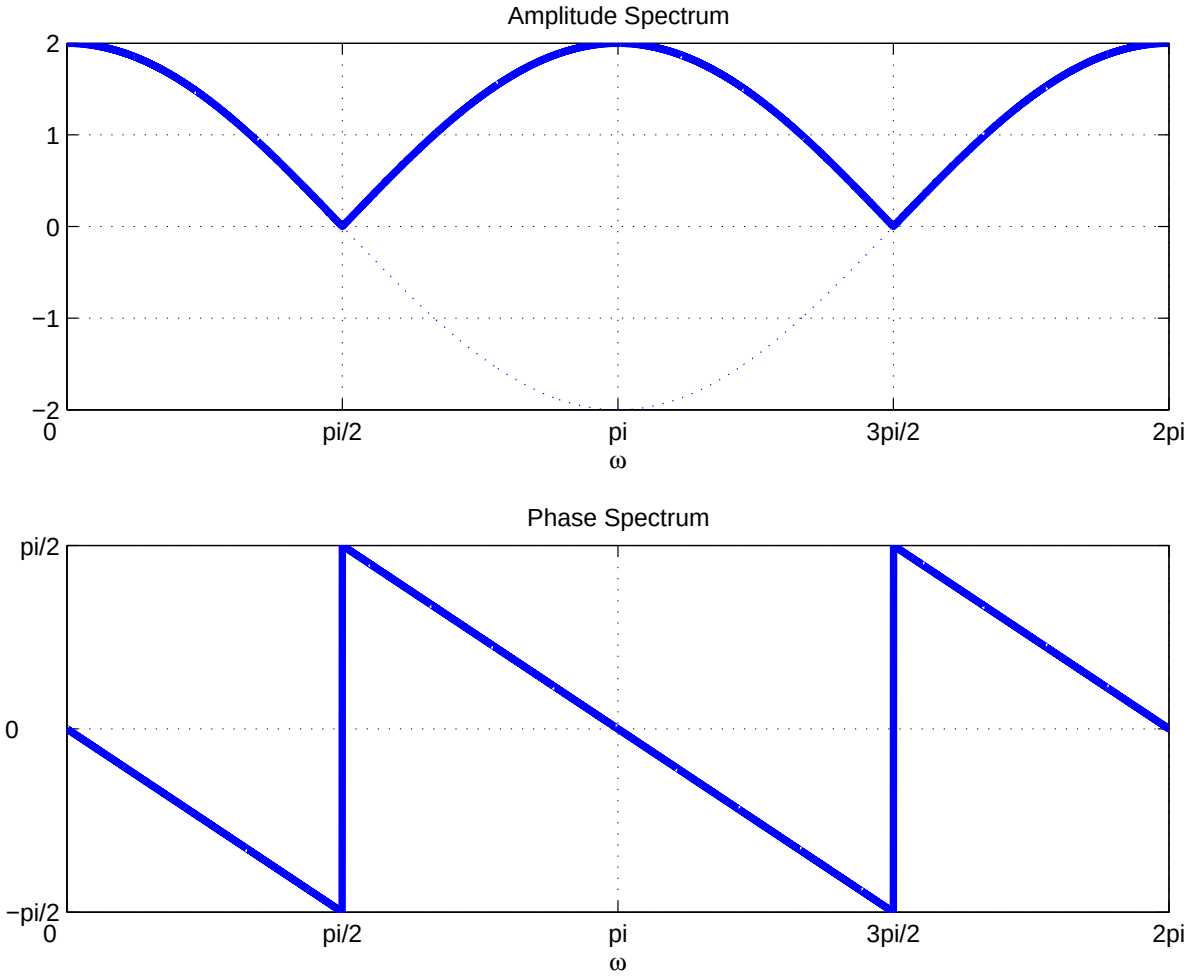

First order digital filters (1)

The block diagram of a first order lowpass digital filter is given by:

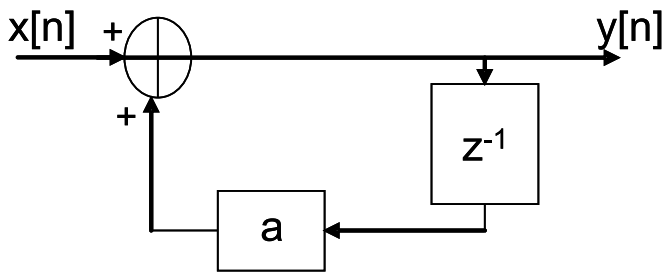

- The transfer function and the impulse response are given by:

$$H(z) = \frac{1}{1 - az^{-1}} = \frac{z}{z - a} \quad ; \quad h[n] = a^n u[n]$$

- The system is stable if $|a| < 1$.
- We assume in what follows that a is a real number satisfying $0 < a < 1$.

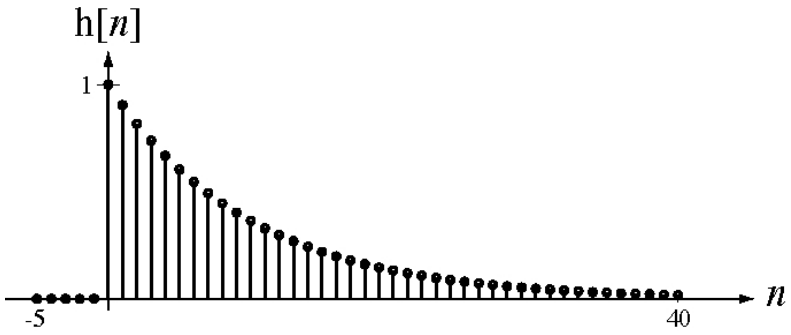

First order digital filters (2)

- The response of a first order lowpass filter to the unit step sequence $x[n] = u[n]$ can be calculated from:

$$Y(z) = X(z)H(z) = \frac{z}{z-1}\frac{z}{z-a}$$

- Consequently:

$$\frac{Y(z)}{z} = \frac{z}{(z-1)(z-a)} = \frac{r_1}{z-1} + \frac{r_2}{z-a} = \cdots$$

$$\Rightarrow y[n] = \frac{1}{1-a}u[n] + \frac{a}{a-1}a^n u[n]$$

  - The steady state response is given by: $\lim_{n\to+\infty} y[n] = \frac{1}{1-a}$ since $\lim_{n\to+\infty} a^n = 0$ since $|a| < 1$.

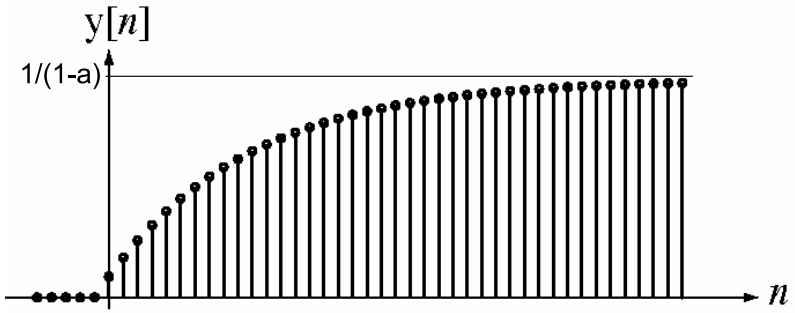

First order digital filters (3)

- $H(e^{j\omega})$ is given by:

$$H(e^{j\omega}) = \frac{e^{j\omega}}{e^{j\omega} - a} = \frac{1}{1 - ae^{-j\omega}} = \frac{1}{1 - a\cos\omega + ja\sin\omega}$$

- Consequently:

$$\arg\left[H(e^{j\omega})\right] = -\tan^{-1}\left[\frac{a\sin\omega}{1 - a\cos\omega}\right]$$

$$\begin{aligned}\left|H(e^{j\omega})\right| &= \frac{1}{\sqrt{(1 - a\cos\omega)^2 + (a\sin\omega)^2}} \\ &= \frac{1}{\sqrt{1 - 2a\cos\omega + a^2\cos^2\omega + a^2\sin^2\omega}} \\ &= \frac{1}{\sqrt{1 + a^2 - 2a\cos\omega}}\end{aligned}$$

- Special cases:
  - For $\omega = 0$: $\left|H(e^{j\omega})\right| = 1/(1 - a)$ and $\arg\left[H(e^{j\omega})\right] = 0$.
  - For $\omega = \pi$: $\left|H(e^{j\omega})\right| = 1/(1 + a)$ and $\arg\left[H(e^{j\omega})\right] = 0$.

First order digital filters (4)

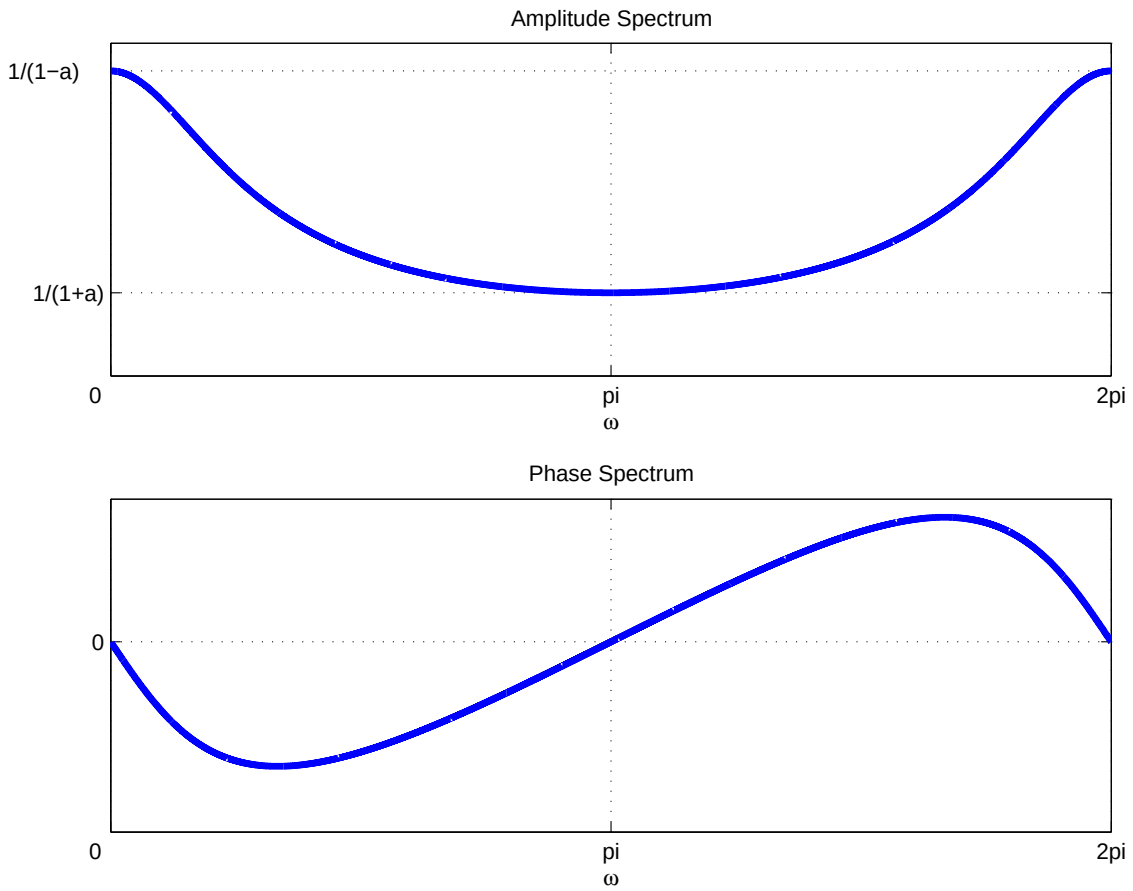

- Inspecting the amplitude spectrum in the interval $[0 \ \ \pi]$, we deduce that the above filter corresponds to a low-pass filter.